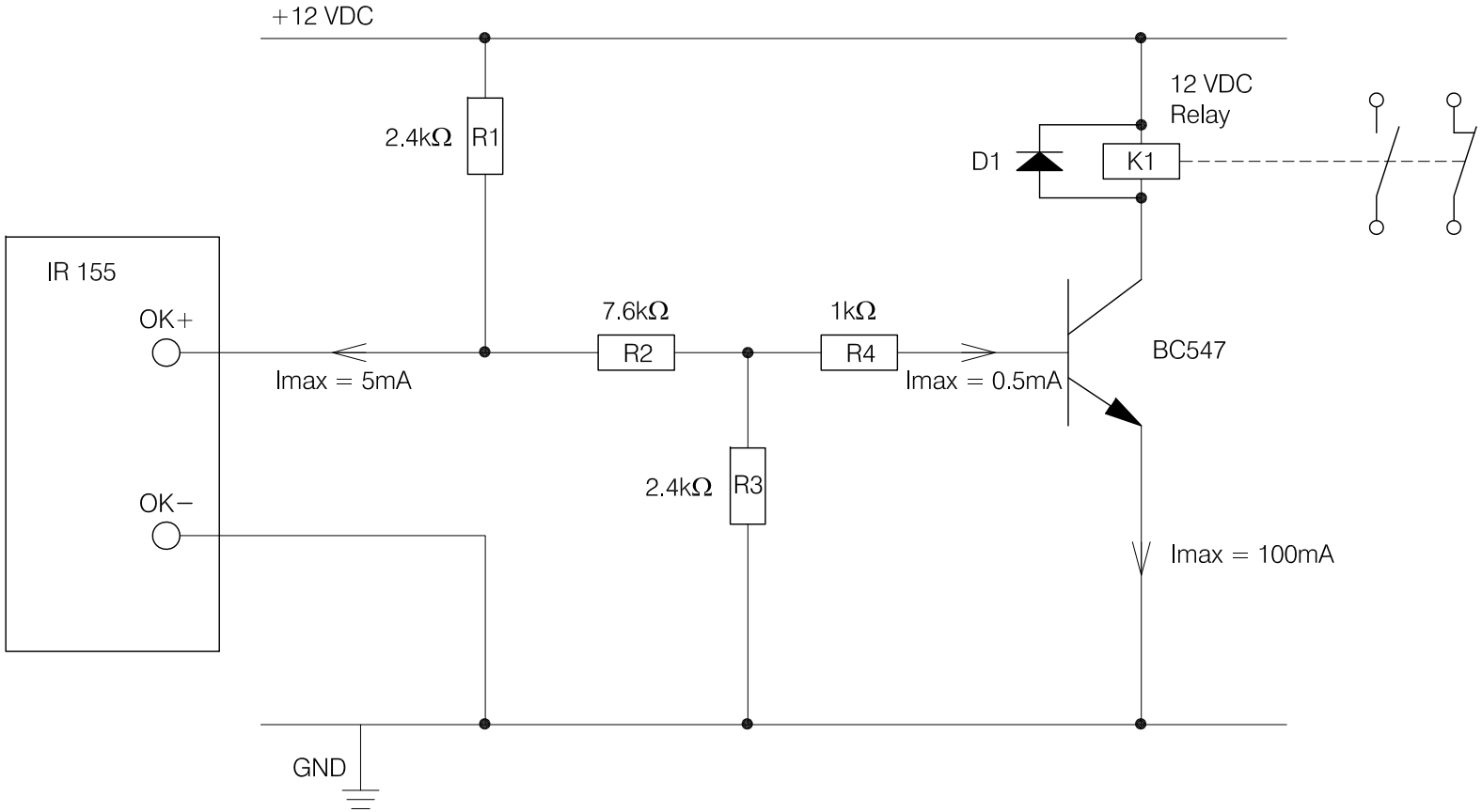

This drawing is the property of BENDER Medical Products.

REV.	DATE	NAME	DATE	Feb. 2, 2010	BENDER	TITLE:	SCALE Not to scale
			DRAWN	L. GIRMAN	700 Fox Chase Highlands Corporate Center Coatesville, PA 19320 1-800-356-4266	Wiring Diagram IR 155 - Circuit addition providing SPDT Contacts at 100kΩ trip	SHEET 1 of 1
			CHK'ED	D. LOBB			Drawing No. SK0-020201
			APP'VED				